Homework No. 5 - Solutions

Problem 1 - (10 points) (Problem 6.2-8 of A&H)

A two-stage, Miller-compensated CMOS op amp has a RHP zero at 20*GB*, a dominant pole due to the Miller compensation, a second pole at p_2 and a mirror pole at -3*GB*. (a) If *GB* is 1MHz, find the location of p_2 corresponding to a 45° phase margin. (b) Assume that in part (a) that $|p_2| = 2GB$ and a nulling resistor is used to cancel p_2. What is the new phase margin assuming that *GB* = 1MHz? (c) Using the conditions of (b), what is the phase margin if C_L is increased by a factor of 4?

Solution

a.) Since the magnitude of the op amp is unity at GB, then let ω = GB to evaluate the phase.

$$\text{Phase margin} = PM = 180° - \tan^{-1}\left(\frac{GB}{|p_1|}\right) - \tan^{-1}\left(\frac{GB}{|p_2|}\right) - \tan^{-1}\left(\frac{GB}{|p_3|}\right) - \tan^{-1}\left(\frac{GB}{|z_1|}\right)$$

But, $p_1 = GB/A_o$, $p_3 = -3GB$ and $z_1 = -20GB$ which gives

$$PM = 45° = 180° - \tan^{-1}(A_o) - \tan^{-1}\left(\frac{GB}{|p_2|}\right) - \tan^{-1}(0.33) - \tan^{-1}(0.05)$$

$$45° \approx 90° - \tan^{-1}\left(\frac{GB}{|p_2|}\right) - \tan^{-1}(0.33) - \tan^{-1}(0.05) = 90° - \tan^{-1}\left(\frac{GB}{|p_2|}\right) - 18.26° - 2.86°$$

$$\therefore \quad \tan^{-1}\left(\frac{GB}{|p_2|}\right) = 45° - 18.26° - 2.86° = 23.48° \rightarrow \frac{GB}{|p_2|} = \tan(23.84°) = 0.442$$

$$\boxed{p_2 = -2.26 \cdot GB = -14.2\text{x}10^6 \text{ rads/sec}}$$

b.) The only roots now are p_1 and p_3. Thus,

$$\boxed{PM = 180° - 90° - \tan^{-1}(0.33) = 90° - 18.3° = 71.7°}$$

c.) In this case, z_1 is at -2GB and p_2 moves to -0.5GB. Thus the phase margin is now,

$$\boxed{PM = 90° - \tan^{-1}(2) + \tan^{-1}(0.5) - \tan^{-1}(0.33) = 90°-63.43°+26.57°-18.3° = 34.4°}$$

Problem 2 – (Problem 6.2-10 of A&H)

For the two-stage op amp of Fig. 6.2-8, find W_1/L_1, W_6/L_6, and C_c if GB = 1 MHz, $|p_2|$ = 5 GB, z = 3 GB and $C_L = C_2$ = 20 pF. Use the parameter values of Table 3.1-2 and consider only the two-pole model of the op amp. The bias current in M5 is 40 μA and in M7 is 320 μA.

Solution

Given

$GB = 1$ MHz.

$p_2 = 5GB$

$z = 3GB$

$C_L = C_2 = 20$ pF

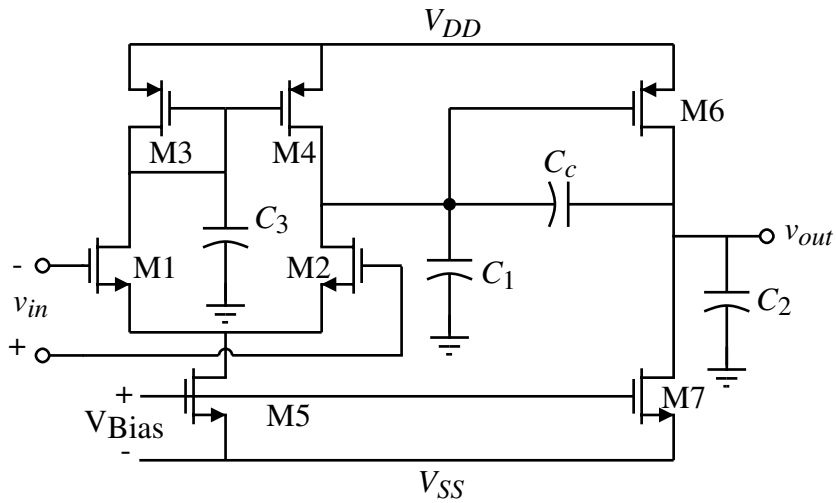

Figure 6.2-8 A two-stage op amp with various parasitic and circuit capacitances shown.

Now, $p_2 = \dfrac{g_{m6}}{C_2}$

or,

$g_{m6} = 628.3\mu S$

or,

$$\boxed{\left(\frac{W}{L}\right)_6 = \frac{g_{m6}^2}{2K_P' I_{D6}} \cong 12.33}$$

RHP zero is given by

$$z = \frac{g_{m6}}{C_C}$$

or, $$\boxed{C_C = \frac{g_{m6}}{z} = 33.3\text{pF}}$$

Finally, Gain-bandwidth is given by

$$GB = \frac{g_{m1}}{C_C}$$

or, $g_{m1} = 209.4 \ \mu S$

or, $$\boxed{\left(\frac{W}{L}\right)_1 = \frac{g_{m1}^2}{2K_N' I_{D1}} \cong 10}$$

Problem 3 - (10 points) (Problem 6.2-11 of A&H)

In the figure shown, assume that R_I = 150 kΩ, R_{II} = 100 kΩ, g_{mII} = 500 μS, C_I = 1 pF, C_{II} = 5 pF, and C_c = 30 pF. Find the value of R_z and the locations of all roots for (a) the case where the zero is moved to infinity and (b) the case where the zero cancels the highest pole.

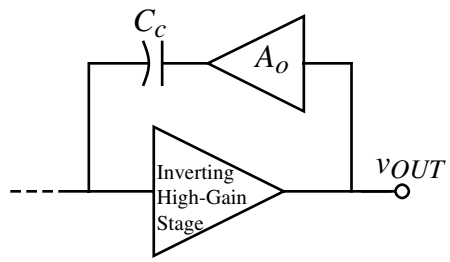

(a.)

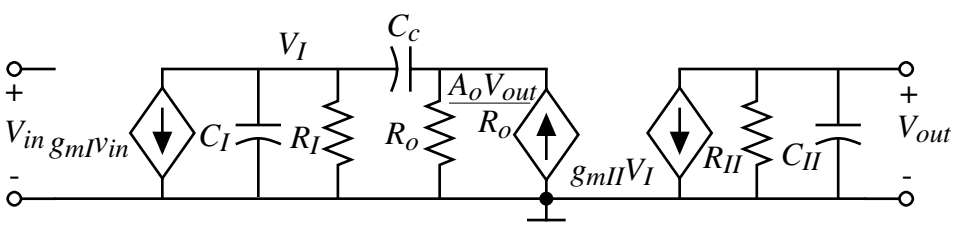

(b.)

S02H4P3

Soluiton

(a.) Zero at infinity.

$$R_z = \frac{1}{g_{mII}} = \frac{1}{500\mu S}$$

$$\boxed{R_z = 2k\Omega}$$

Check pole due to R_z.

$$p_4 = \frac{-1}{R_z C_I} = \frac{-1}{2k\Omega \cdot 1pF} = -500x10^6 \text{ rps or } 79.58 \text{ MHz}$$

The pole at p_2 is

$$p_2 \approx \frac{-g_{mII}C_c}{C_I C_{II} + C_c C_I + C_c C_{II}} \approx \frac{-g_{mII}}{C_{II}} = \frac{-500\mu S}{5pF} = 100x10^6 \text{ rps or } 15.9 \text{ MHz}$$

Therefore, p_2 is the next highest pole.

(b.) Zero at p_2.

$$R_z = \left(\frac{C_c + C_{II}}{C_c}\right)(1/g_{mII}) = \left(\frac{30+5}{30}\right)\frac{1}{500\mu S} = 2.33k\_$$

$$\boxed{R_z = 2.33k\Omega}$$

Problem 4 – (10 points)

The poles and zeros of a Miller compensated, two-stage op amp are shown below.

(a.) If the influence of p_3 and z_1 are ignored, what is the GB in MHz of this op amp for 60° phase margin?

(b.) What is the value of $A_v(0)$? What is the value of C_c if g_{m1}=g_{m2}=500μS?

(c.) If p_2 is moved to p_3, what is the new GB in MHz for 60° phase margin? What is the new C_c if the input transconductances are the same as in (b.)?

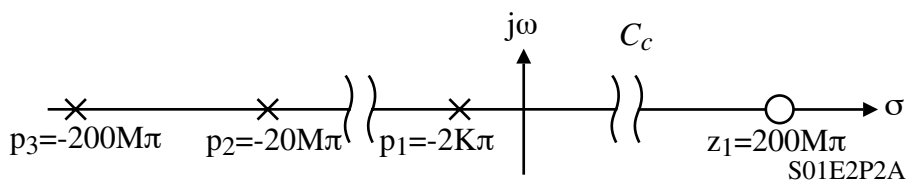

Solution

(a.) The phase margin, PM, can be written as

$$\text{PM} = 180 - \tan^{-1}\left(\frac{GB}{|p_2|}\right) - \tan^{-1}\left(\frac{GB}{|p_3|}\right) - \tan^{-1}\left(\frac{GB}{z_1}\right) \approx 90° - \tan^{-1}\left(\frac{GB}{|p_2|}\right) = 60°$$

$$\therefore \quad \tan^{-1}\left(\frac{GB}{|p_2|}\right) = 30° \quad \rightarrow \quad GB = 0.5774 \cdot |p_2| = \underline{\underline{5.774\text{MHz}}}$$

(b.) $$A_v(0) = \frac{GB}{|p_1|} = \frac{5.774\text{MHz}}{1\text{kHz}} = \underline{\underline{5{,}774\text{V/V}}}$$

$$\frac{g_{m1}}{C_c} = GB \quad \rightarrow \quad C_c = \frac{g_{m1}}{GB} = \frac{500\mu\text{S}}{2\pi \cdot 5.774\text{x}10^6} = \underline{\underline{13.78\text{pF}}}$$

(c.) The phase margin, PM, can be written as

$$\text{PM} = 180 - \tan^{-1}\left(\frac{GB}{|p_2|}\right) - \tan^{-1}\left(\frac{GB}{|p_3|}\right) - \tan^{-1}\left(\frac{GB}{z_1}\right) \approx 90° - 3 \cdot \tan^{-1}\left(\frac{GB}{|p_2|}\right) = 60°$$

$$\therefore \quad \tan^{-1}\left(\frac{GB}{|p_2|}\right) = 10° \quad \rightarrow \quad GB = 0.1763 \cdot |p_2| = 0.01763 \cdot 100\text{MHz} = \underline{\underline{17.63\text{MHz}}}$$

$$C_c = \frac{g_{m1}}{GB} = \frac{500\mu\text{S}}{2\text{p} \cdot 17.63\text{x}10^6} = \underline{\underline{4.514\text{pF}}}$$

Problem 5

A self-compensated op amp has three higher order poles grouped closely around $-1\text{x}10^9$ radians/sec. What should be the GB of this op amp in Hz to achieve a 60° phase margin? If the low frequency gain of the op amp is 80dB, where is the location of the dominant pole, p_1? If the output resistance of this amplifier is 10MΩ, what is the value of C_L that will give this location for p_1? (Ignore any other capacitance at the output for this part of the problem).

Solution

The key to this problem is to assume that the three closely grouped poles around $-1\text{x}10^9$ radians/sec. can be approximated as three poles at $-1\text{x}10^9$ radians/sec. Therefore,

$$\text{Phase margin} = \text{PM} = 180° - \tan^{-1}\left(\frac{GB}{|p_1|}\right) - 3\tan^{-1}\left(\frac{GB}{|p_H|}\right) = 60°$$

where p_H is a pole at $-1\text{x}10^9$ radians/sec. Assuming that $GB/|p_1|$ is large then, we can write the above as,

$$180° - 90° - 3\tan^{-1}\left(\frac{GB}{|p_H|}\right) = 60° \rightarrow 30° = -3\tan^{-1}\left(\frac{GB}{|p_H|}\right) \rightarrow \frac{GB}{|p_H|} = \tan(10°) = 0.1763$$

$\therefore$ $GB = 0.1763|p_H| = 176.3$ Mradians/sec. $\rightarrow$ $\underline{\underline{GB = 28.06\text{MHz}}}$

80dB $\rightarrow$ 10,000 which gives

$$|p_1| = \frac{GB}{A_v} = \frac{176.3\text{x}10^6}{10^4} = \underline{\underline{17{,}630 \text{ radians/sec.}}} \rightarrow |p_1| = 2.806\text{kHz}$$

The expression for p_1 is

$$|p_1| = \frac{1}{R_{out}C_L} \rightarrow C_L = \frac{1}{R_{out}|p_1|} = \frac{1}{1.763\text{x}10^4 \cdot 10^7} = \underline{\underline{5.672\text{pF}}}$$